PREMIER PACK INDUSTRIES SDN.BHD.	Master Card No. : BEDROOM- 001	W/O NO.:
Customer : HOCK GUAN SENG SDN BHD	*IMPORTANT :* Please confirm Spelling, Text, Arrangement, Logo & Style of this Art Work before Approving it. Thank you !	**Please Sign & Chop to Refax Back:**	QTY : 32 PCS
Measurement : 1531MM X 536MM X 941MM — Type :RSC (K175/K175/K175)		D/DATE :
Printed Color : BLACK 8088 / RED 18413	Prepared by: Checked by:	Approved By : Date :	P/O NO. : 2606/35
Model : 6D DRESSER - WHITE		

(A)

SKU : B230-DR
NAME : KARINA
PO :

UPC CODE
SERIAL NUMBER

HANDLE WITH CARE | FRAGILE | KEEP DRY | SIDE UP

FRONT
FRENTE
أمام

KARINA DRESSER

UPC CODE
SERIAL NUMBER

SKU : B230-DR
NAME : KARINA
PO :

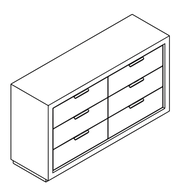

Description: Dresser
Descripción: Aparador

Color: White
Color: Blanca

KARINA DRESSER

SKU : B230-DR
NAME : KARINA
PO :

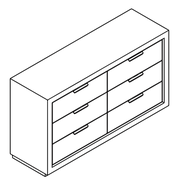

UPC CODE | SERIAL NUMBER

N.W : 87.10 KGS / 192.02 LBS
G.W : 93.86 KGS / 206.93 LBS
CUFT : 27.68'

1531MM — 534MM

(B)

HANDLE WITH CARE | FRAGILE | KEEP DRY | SIDE UP

BACK
TRASERO
خلف

MADE IN MALAYSIA
HECHO EN MALASIA
صنع في ماليزيا

SKU : B230-DR
NAME : KARINA
PO :

NW : 87.10 KGS / 192.02 LBS
GW : 93.86 KGS / 206.93 LBS
CARTON SIZE : 60.13"W X 21.50"D X 37.00"H
CUFT : 27.68'

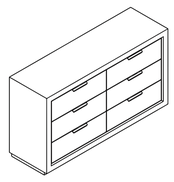

SCAN QR CODE FOR ASSEMBLY INSTRUCTIONS
ESCANEAR EN BUSCA DE INSTRUCCIONES DE ENSAMBLAJE

SKU : B230-DR
NAME : KARINA
PO :

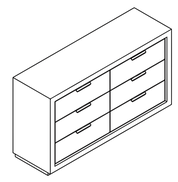

CARTON SIZE :
60.13"W X 21.50"D X 37.00"H

271MM — 941MM — 271MM

1531MM — 534MM

50/30mm

SKU : B230-DR
NAME : KARINA
PO :

30/20mm

MADE IN MALAYSIA
HECHO EN MALASIA
صنع في ماليزيا

HANDLE WITH CARE | FRAGILE | KEEP DRY | SIDE UP

FRONT
FRENTE
أمام

BACK
TRASERO
خلف

20mm
N.W : 87.10 KGS / 192.02 LBS
G.W : 93.86 KGS / 206.93 LBS
CUFT : 27.68'

30mm
Description: Dresser

Color: White

UPC CODE
160x75mm

SERIAL NUMBER
160x75mm

25mm
NW : 87.10 KGS / 192.02 LBS
GW : 93.86 KGS / 206.93 LBS
CARTON SIZE : 60.13"W X 21.50"D X 37.00"H
CUFT : 27.68'

30mm
Descripción: Aparador

Color: Blanca

SCAN QR CODE FOR ASSEMBLY INSTRUCTIONS
ESCANEAR EN BUSCA DE INSTRUCCIONES DE ENSAMBLAJE

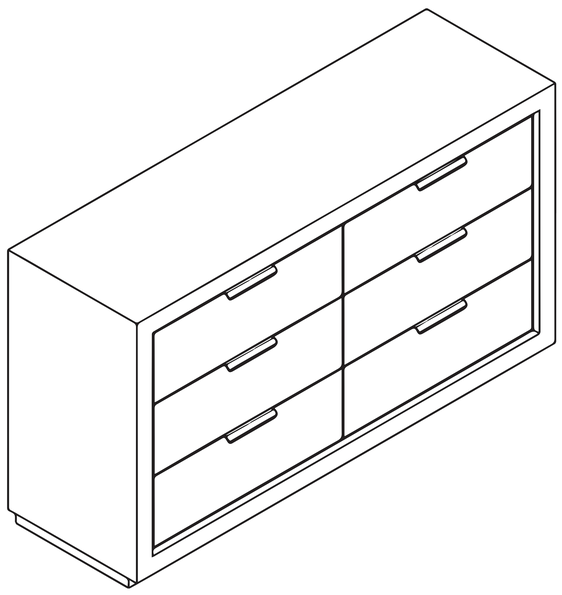

300mm

20mm
CARTON SIZE :
60.13"W X 21.50"D X 37.00"H

30mm
KARINA DRESSER

PREMIER PACK INDUSTRIES SDN.BHD.		Master Card No. : BEDROOM- 002	W/O NO.:
Customer : HOCK GUAN SENG SDN BHD		*IMPORTANT :* Please confirm Spelling, Text, Arrangement, Logo & Style of this Art Work before Approving it. Thank you !	Please Sign & Chop to Refax Back:	QTY : 32 PCS
Measurement : 1093MM X 1007MM X 84MM	Type :OSC (K175/K175/K175)		D/DATE :
Printed Color : BLACK 8088 / RED 18413		Prepared by : Checked by :	Approved By : Date :	P/O NO. : 2606/35
Model : MIRROR - WHITE			

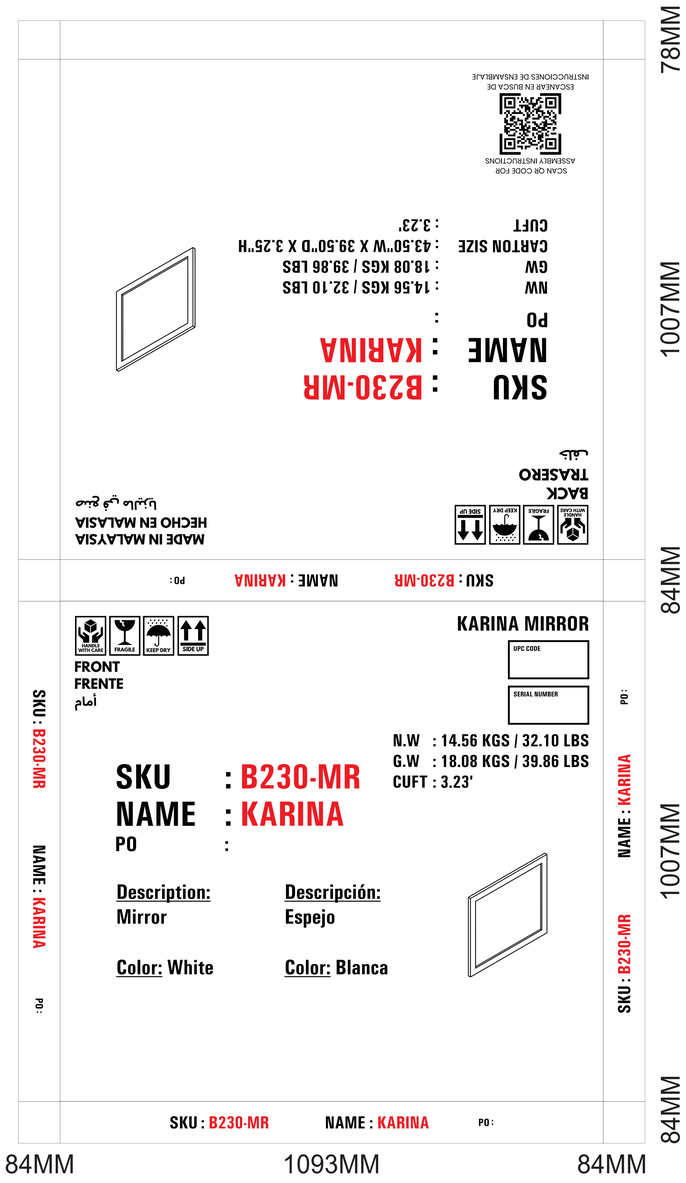

50mm

SKU : B230-MR

NAME : KARINA

PO :

30mm

30mm

Description:

Mirror

Color: White

30mm

Descripción:

Espejo

Color: Blanca

SCAN QR CODE FOR ASSEMBLY INSTRUCTIONS

ESCANEAR EN BUSCA DE INSTRUCCIONES DE ENSAMBLAJE

250mm

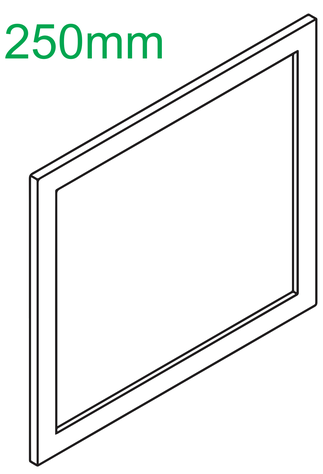

UPC CODE

160x75mm

SERIAL NUMBER

160x75mm

MADE IN MALAYSIA

HECHO EN MALASIA

صنع في ماليزيا

30mm

KARINA MIRROR

FRONT
FRENTE
أمام

BACK
TRASERO
خلف

25mm

SKU : B230-MR

25mm

NAME : KARINA

15mm

PO :

25mm

NW : 14.56 KGS / 32.10 LBS
GW : 18.08 KGS / 39.86 LBS
CARTON SIZE : 43.50"W X 39.50"D X 3.25"H
CUFT : 3.23'

25mm

N.W : 14.56 KGS / 32.10 LBS
G.W : 18.08 KGS / 39.86 LBS
CUFT : 3.23'

PREMIER PACK INDUSTRIES SDN.BHD.			Master Card No. :	BEDROOM- 003	W/O NO.:
Customer :	HOCK GUAN SENG SDN BHD		***IMPORTANT :*** Please confirm Spelling, Text, Arrangement, Logo & Style of this Art Work before Approving it. Thank you !	**Please Sign & Chop to Refax Back:**	QTY : 22 PCS
Measurement :	871MM X 461MM X 1310MM	Type :RSC (K175/K175/K175)			D/DATE :
Printed Color :	BLACK 8088 / RED 18413		Prepared by : / Checked by :	Approved By : / Date :	P/O NO. : 2606/35
Model :	5D CHEST - WHITE				

SKU : B230-CH
NAME : KARINA
PO :

UPC CODE
SERIAL NUMBER

KARINA CHEST

FRONT
FRENTE
أمام

SKU : B230-CH
NAME : KARINA
PO :

Description: Chest
Descripción: Cómoda

Color: White
Color: Blanca

KARINA CHEST

SKU : B230-CH
NAME : KARINA
PO :

UPC CODE
SERIAL NUMBER

N.W : 83.30 KGS / 183.65 LBS
G.W : 90.56 KGS / 199.65 LBS
CUFT : 18.63'

MADE IN MALAYSIA
HECHO EN MALASIA
صنع في ماليزيا

BACK
TRASERO
خلف

SKU : B230-CH
NAME : KARINA
PO :

NW : 83.30 KGS / 183.65 LBS
GW : 90.56 KGS / 199.65 LBS
CARTON SIZE : 34.25"W X 18.25"D X 51.50"H
CUFT : 18.63'

SCAN QR CODE FOR ASSEMBLY INSTRUCTIONS
ESCANEAR EN BUSCA DE INSTRUCCIONES DE ENSAMBLAJE

SKU : B230-CH
NAME : KARINA
PO :

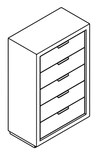

CARTON SIZE :
34.25"W X 18.25"D X 51.50"H

233MM
1310MM
233MM

871MM 461MM 871MM 459MM

SCAN QR CODE FOR ASSEMBLY INSTRUCTIONS

ESCANEAR EN BUSCA DE INSTRUCCIONES DE ENSAMBLAJE

UPC CODE
160x75mm

SERIAL NUMBER
160x75mm

50/30mm
SKU : B230-CH
NAME : KARINA
PO :
30/20mm

30mm
Description:
Chest

30mm
Descripción:
Cómoda

300mm

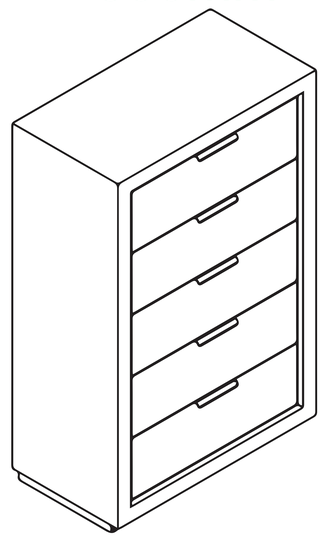

Color: White **Color: Blanca**

20mm
CARTON SIZE :
34.25"W X 18.25"D X 51.50"H

FRONT **BACK**
FRENTE **TRASERO**
أمام خلف

30mm
KARINA CHEST

MADE IN MALAYSIA
HECHO EN MALASIA
صنع في ماليزيا

20mm
N.W : 83.30 KGS / 183.65 LBS
G.W : 90.56 KGS / 199.65 LBS
CUFT : 18.63'

25mm
NW : 83.30 KGS / 183.65 LBS
GW : 90.56 KGS / 199.65 LBS
CARTON SIZE : 34.25"W X 18.25"D X 51.50"H
CUFT : 18.63'

PREMIER PACK INDUSTRIES SDN.BHD.		Master Card No. : BEDROOM- 004	W/O NO.:
Customer : HOCK GUAN SENG SDN BHD		*IMPORTANT :* Please confirm Spelling, Text, Arrangement, Logo & Style of this Art Work before Approving it. Thank you !	Please Sign & Chop to Refax Back:	QTY : 22 PCS
Measurement : 1654MM X 972MM X 195MM	Type :OSC (K175/K175/K175)			D/DATE :
Printed Color : BLACK 8088 / RED 18413				
Model : QUEEN UPH BED - WHITE		Prepared by: Checked by:	Approved By : Date :	P/O NO. : 2606/35

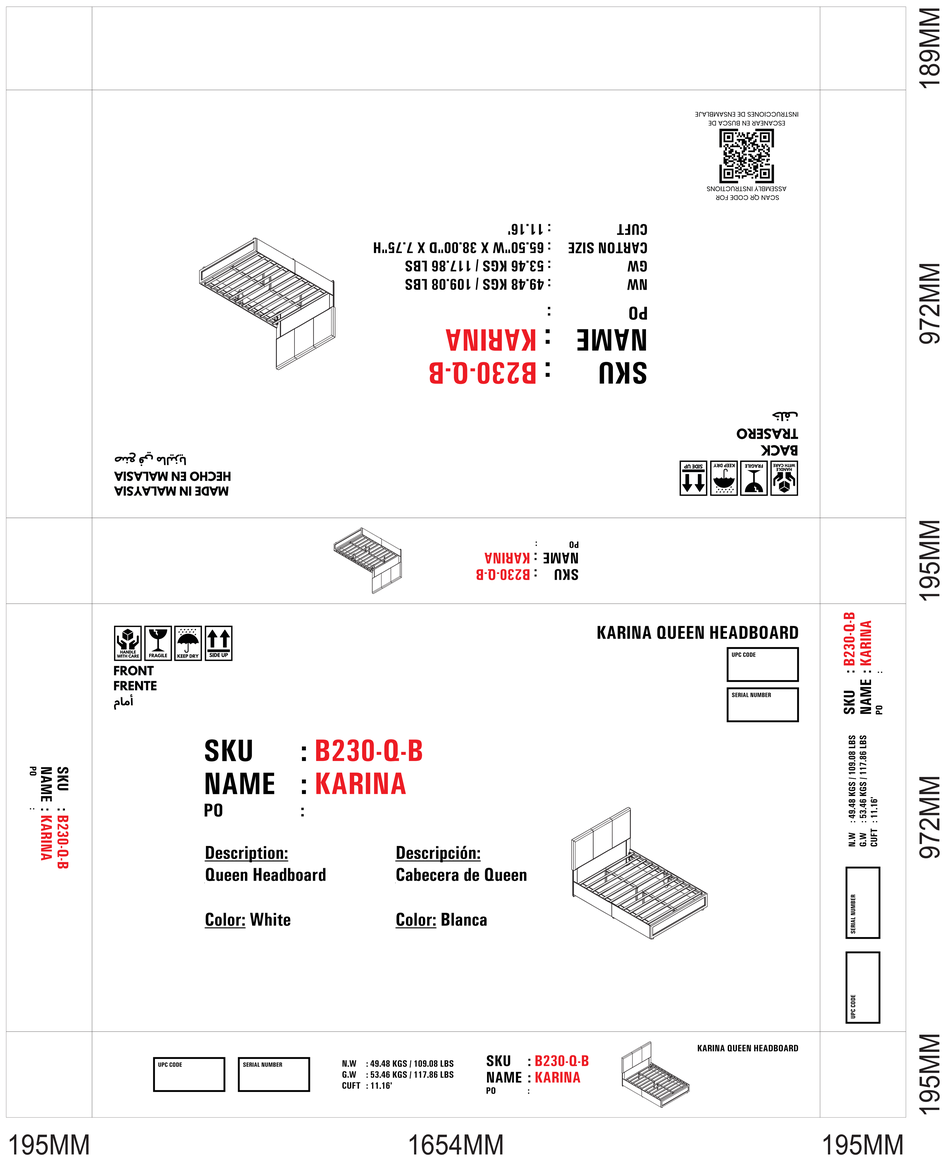

50/25mm

SKU : B230-Q-B
NAME : KARINA
PO :

30/15mm

30mm

Description:
Queen Headboard

Color: White

30mm

Descripción:
Cabecera de Queen

Color: Blanca

SCAN QR CODE FOR ASSEMBLY INSTRUCTIONS

ESCANEAR EN BUSCA DE INSTRUCCIONES DE ENSAMBLAJE

MADE IN MALAYSIA
HECHO EN MALASIA
صنع في ماليزيا

300/150mm

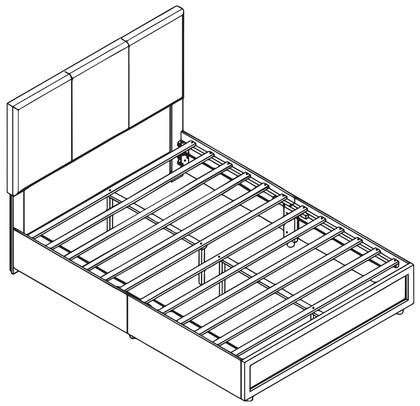

UPC CODE
160x75mm

SERIAL NUMBER
160x75mm

25mm

NW : 49.48 KGS / 109.08 LBS
GW : 53.46 KGS / 117.86 LBS
CARTON SIZE : 65.50"W X 38.00"D X 7.75"H
CUFT : 11.16'

30/15mm

KARINA QUEEN HEADBOARD

15mm

N.W : 49.48 KGS / 109.08 LBS
G.W : 53.46 KGS / 117.86 LBS
CUFT : 11.16'

FRONT
FRENTE
أمام

BACK
TRASERO
خلف

PREMIER PACK INDUSTRIES SDN.BHD.			Master Card No. :	BEDROOM- 005	W/O NO.:
Customer :	HOCK GUAN SENG SDN BHD		***IMPORTANT :*** Please confirm Spelling, Text, Arrangement, Logo & Style of this Art Work before Approving it. Thank you !	**Please Sign & Chop to Refax Back:**	QTY : 22 PCS
Measurement :	298MM X 236MM X 63MM	Type :OSC (T150/M-BF)			D/DATE :
Printed Color :	BLACK 8088		Prepared by : / Checked by :	Approved By : / Date :	P/O NO. : 2606/35
Model :	QUEEN UPH BED - INNER				

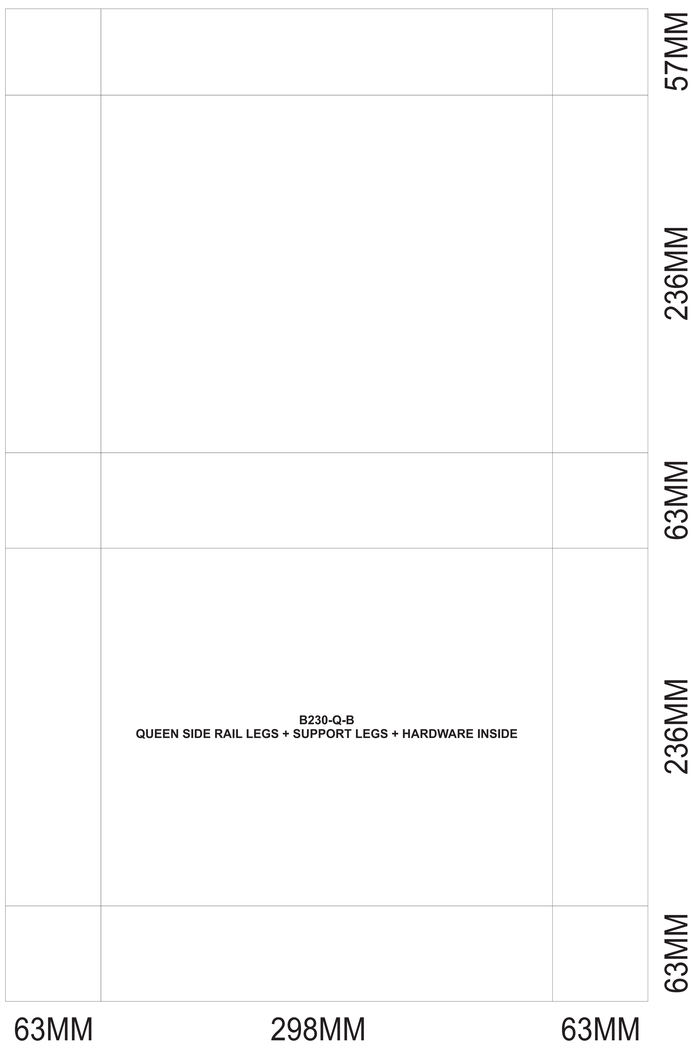

6MM

B230-Q-B

QUEEN SIDE RAIL LEGS + SUPPORT LEGS + HARDWARE INSIDE

PREMIER PACK INDUSTRIES SDN.BHD.		Master Card No. : BEDROOM- 006	W/O NO.:
Customer : HOCK GUAN SENG SDN BHD		*IMPORTANT :* Please confirm Spelling, Text, Arrangement, Logo & Style of this Art Work before Approving it. Thank you !	Please Sign & Chop to Refax Back:	QTY : 16 PCS
Measurement : 2059MM X 972MM X 195MM	Type :OSC (K175/K175/K175)			D/DATE :
Printed Color : BLACK 8088 / RED 18413		Prepared by : Checked by :	Approved By : Date :	P/O NO. : 2606/35
Model : KING UPH BED - WHITE				

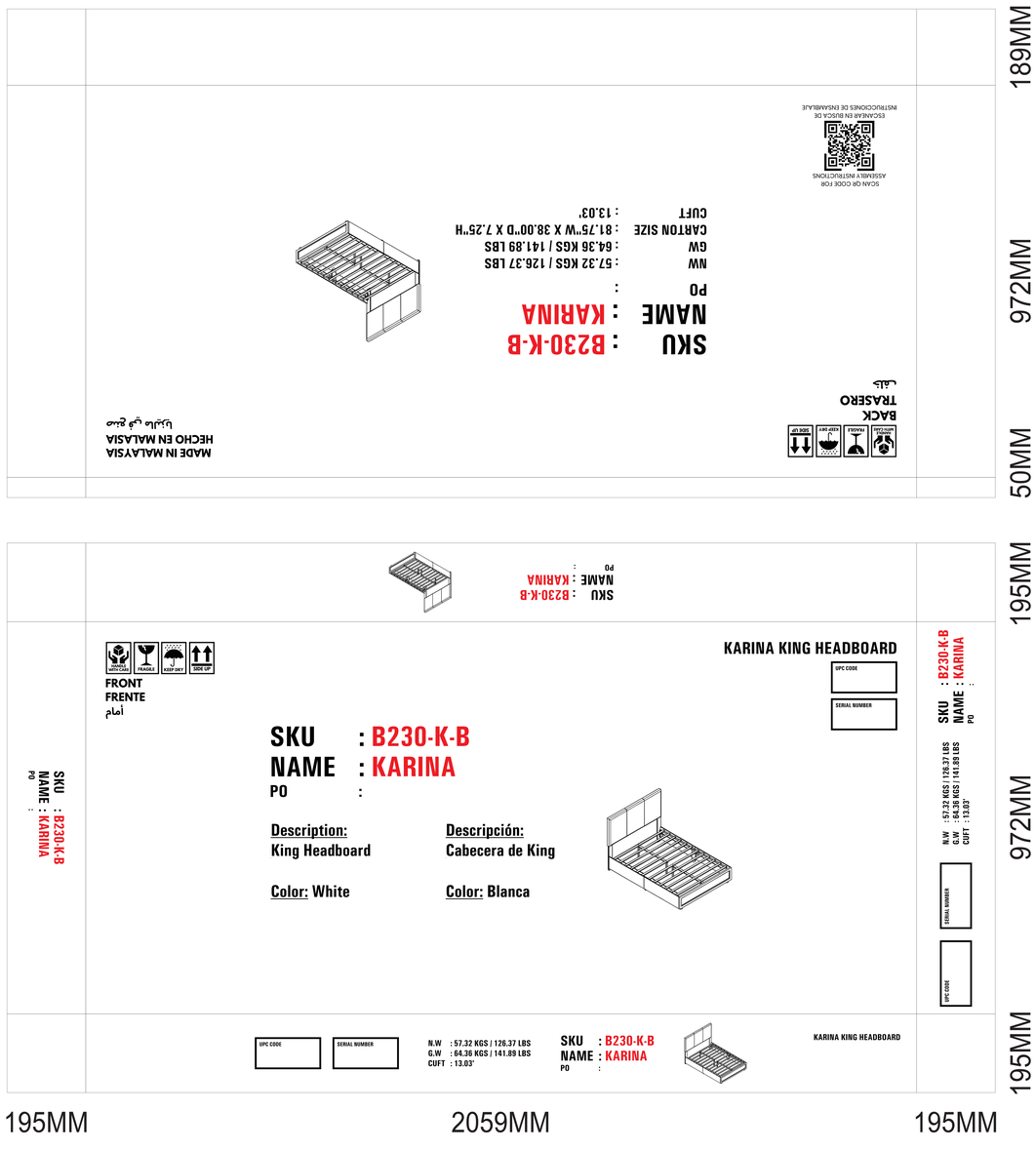

50/25mm

SKU : B230-K-B

NAME : KARINA

PO :

30/15mm

30mm

Description:

King Headboard

Color: White

30mm

Descripción:

Cabecera de King

Color: Blanca

SCAN QR CODE FOR ASSEMBLY INSTRUCTIONS

ESCANEAR EN BUSCA DE INSTRUCCIONES DE ENSAMBLAJE

MADE IN MALAYSIA
HECHO EN MALASIA
صنع في ماليزيا

300/150mm

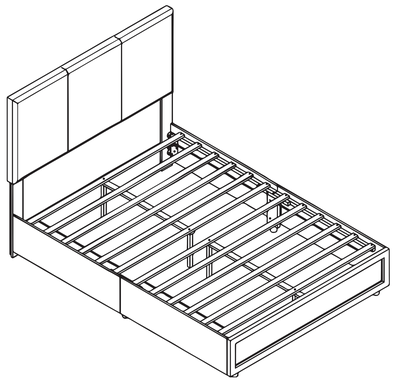

UPC CODE

160x75mm

SERIAL NUMBER

160x75mm

30/15mm

KARINA KING HEADBOARD

FRONT
FRENTE
أمام

BACK
TRASERO
خلف

25mm

NW : 57.32 KGS / 126.37 LBS
GW : 64.36 KGS / 141.89 LBS
CARTON SIZE : 81.75"W X 38.00"D X 7.25"H
CUFT : 13.03'

15mm

N.W : 57.32 KGS / 126.37 LBS
G.W : 64.36 KGS / 141.89 LBS
CUFT : 13.03'

PREMIER PACK INDUSTRIES SDN.BHD.			Master Card No. :	BEDROOM- 007	W/O NO.:
Customer :	HOCK GUAN SENG SDN BHD		***IMPORTANT :*** Please confirm Spelling, Text, Arrangement, Logo & Style of this Art Work before Approving it. Thank you !	**Please Sign & Chop to Refax Back:**	QTY : 16 PCS
Measurement :	298MM X 286MM X 63MM	Type :OSC (T150/M-BF)			D/DATE :
Printed Color :	BLACK 8088		Prepared by : / Checked by :	Approved By : / Date :	P/O NO. : 2606/35
Model :	KING UPH BED - INNER				

6MM

B230-K-B

KING SIDE RAIL LEGS + SUPPORT LEGS + HARDWARE INSIDE

PREMIER PACK INDUSTRIES SDN.BHD.		Master Card No. :	BEDROOM- 008	W/O NO.:
Customer :	HOCK GUAN SENG SDN BHD	*IMPORTANT :* Please confirm Spelling, Text, Arrangement, Logo & Style of this Art Work before Approving it. Thank you !	**Please Sign & Chop to Refax Back:**	QTY : 66 PCS
Measurement :	676MM X 458MM X 697MM — Type :RSC (K175/K175/K175)			D/DATE :
Printed Color :	BLACK 8088 / RED 18413	Prepared by: / Checked by:	Approved By : / Date :	P/O NO. : 2606/35
Model :	NIGHTSTAND - WHITE			

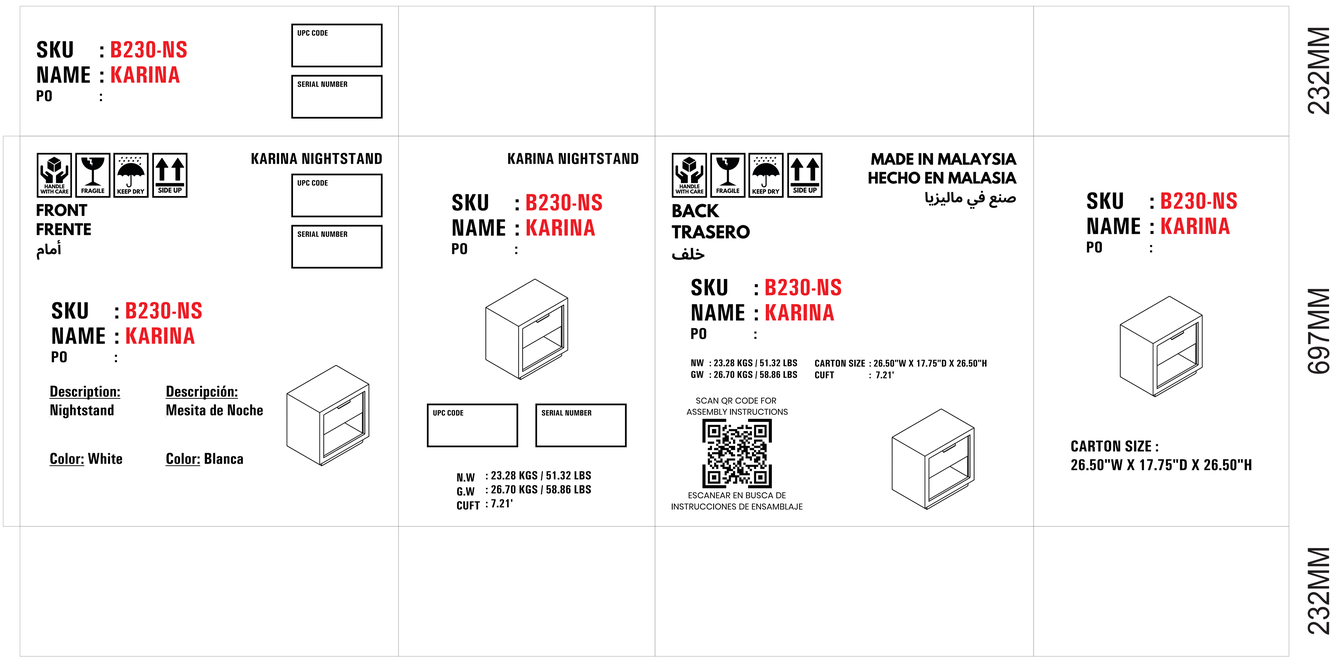

SCAN QR CODE FOR ASSEMBLY INSTRUCTIONS

ESCANEAR EN BUSCA DE INSTRUCCIONES DE ENSAMBLAJE

180mm

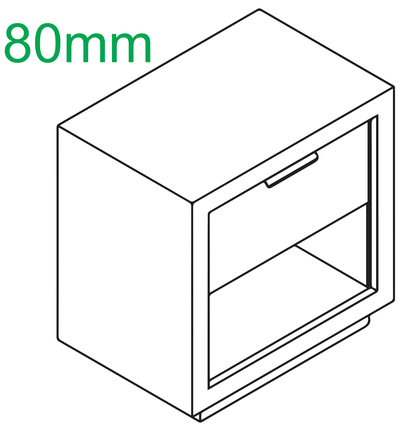

20mm

KARINA NIGHTSTAND

UPC CODE
160x75mm

SERIAL NUMBER
160x75mm

30mm

SKU : B230-NS
NAME : KARINA
PO :

20mm

20mm

Description:
Nightstand

Color: White

20mm

Descripción:
Mesita de Noche

Color: Blanca

HANDLE WITH CARE | FRAGILE | KEEP DRY | SIDE UP

FRONT
FRENTE
أمام

BACK
TRASERO
خلف

20mm

CARTON SIZE :
26.50"W X 17.75"D X 26.50"H

MADE IN MALAYSIA
HECHO EN MALASIA
صنع في ماليزيا

15mm

N.W : 23.28 KGS / 51.32 LBS
G.W : 26.70 KGS / 58.86 LBS
CUFT : 7.21'

12mm

NW : 23.28 KGS / 51.32 LBS
GW : 26.70 KGS / 58.86 LBS

12mm

CARTON SIZE : 26.50"W X 17.75"D X 26.50"H
CUFT : 7.21'

PREMIER PACK INDUSTRIES SDN.BHD.		Master Card No. :	BEDROOM- 009	W/O NO.:
Customer :	HOCK GUAN SENG SDN BHD	*IMPORTANT :* Please confirm Spelling, Text, Arrangement, Logo & Style of this Art Work before Approving it. Thank you !	Please Sign & Chop to Refax Back:	QTY : 33 PCS
Measurement :	943MM X 677MM X 161MM — Type :OSC (K175/K175/K175)			D/DATE :
Printed Color :	BLACK 8088 / RED 18413	Prepared by : / Checked by :	Approved By : / Date :	P/O NO. : 2606/35
Model :	PIERS - WHITE			

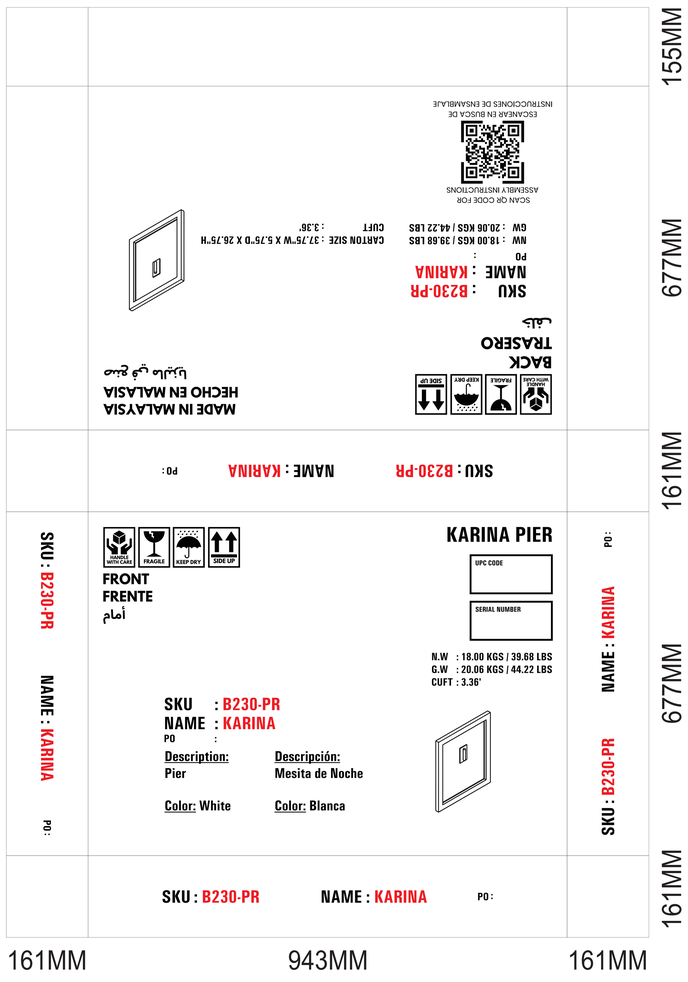

25mm
SKU : B230-PR
NAME : KARINA
PO :
15mm

20mm
Description:
Pier

20mm
Descripción:
Mesita de Noche

Color: White

Color: Blanca

SCAN QR CODE FOR
ASSEMBLY INSTRUCTIONS

ESCANEAR EN BUSCA DE
INSTRUCCIONES DE ENSAMBLAJE

200mm

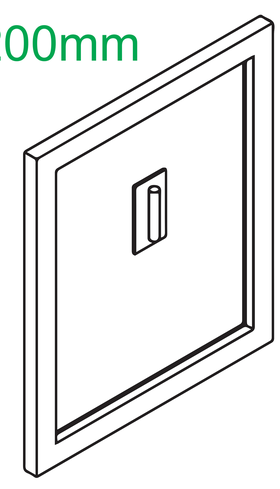

UPC CODE
160x75mm

SERIAL NUMBER
160x75mm

15mm
N.W : 18.00 KGS / 39.68 LBS
G.W : 20.06 KGS / 44.22 LBS
CUFT : 3.36'

30mm
KARINA PIER

FRONT
FRENTE
أمام

BACK
TRASERO
خلف

25mm
SKU : B230-PR

25mm
NAME : KARINA

15mm
PO :

MADE IN MALAYSIA
HECHO EN MALASIA
صنع في ماليزيا

15mm
NW : 18.00 KGS / 39.68 LBS
GW : 20.06 KGS / 44.22 LBS

15mm
CARTON SIZE : 37.75"W X 5.75"D X 26.75"H
CUFT : 3.36'

PREMIER PACK INDUSTRIES SDN.BHD.		Master Card No. : BEDROOM- 010	W/O NO.:
Customer : HOCK GUAN SENG SDN BHD		***IMPORTANT :*** Please confirm Spelling, Text, Arrangement, Logo & Style of this Art Work before Approving it. Thank you ! **Please Sign & Chop to Refax Back:**	QTY : 33 PCS
Measurement : 178MM X 148MM X 41MM	Type :OSC (T150/M-BF)		D/DATE :
Printed Color : BLACK 8088		Prepared by : Checked by : Approved By : Date :	P/O NO. : 2606/35
Model : PIERS - INNER			

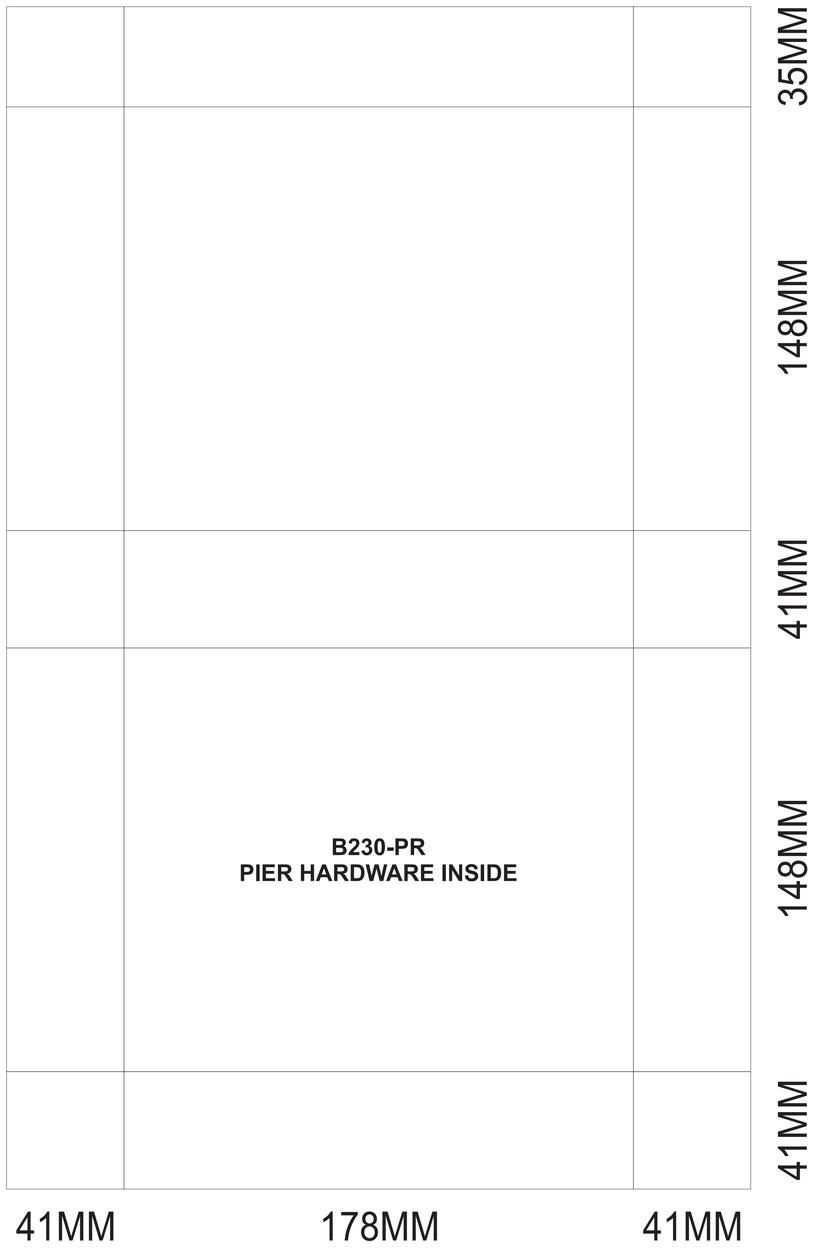

6MM
B230-PR
PIER HARDWARE INSIDE