PREMIER PACK INDUSTRIES SDN.BHD.		Master Card No. :	BEDROOM- 008	W/O NO.:
Customer :	HOCK GUAN SENG SDN BHD	*IMPORTANT :* Please confirm Spelling, Text, Arrangement, Logo & Style of this Art Work before Approving it. Thank you !	**Please Sign & Chop to Refax Back:**	QTY : 66 PCS
Measurement :	676MM X 458MM X 697MM — Type :RSC (K175/K175/K175)			D/DATE :
Printed Color :	BLACK 8088 / RED 18413	Prepared by: / Checked by:	Approved By : / Date :	P/O NO. : 2606/35
Model :	NIGHTSTAND - WHITE			

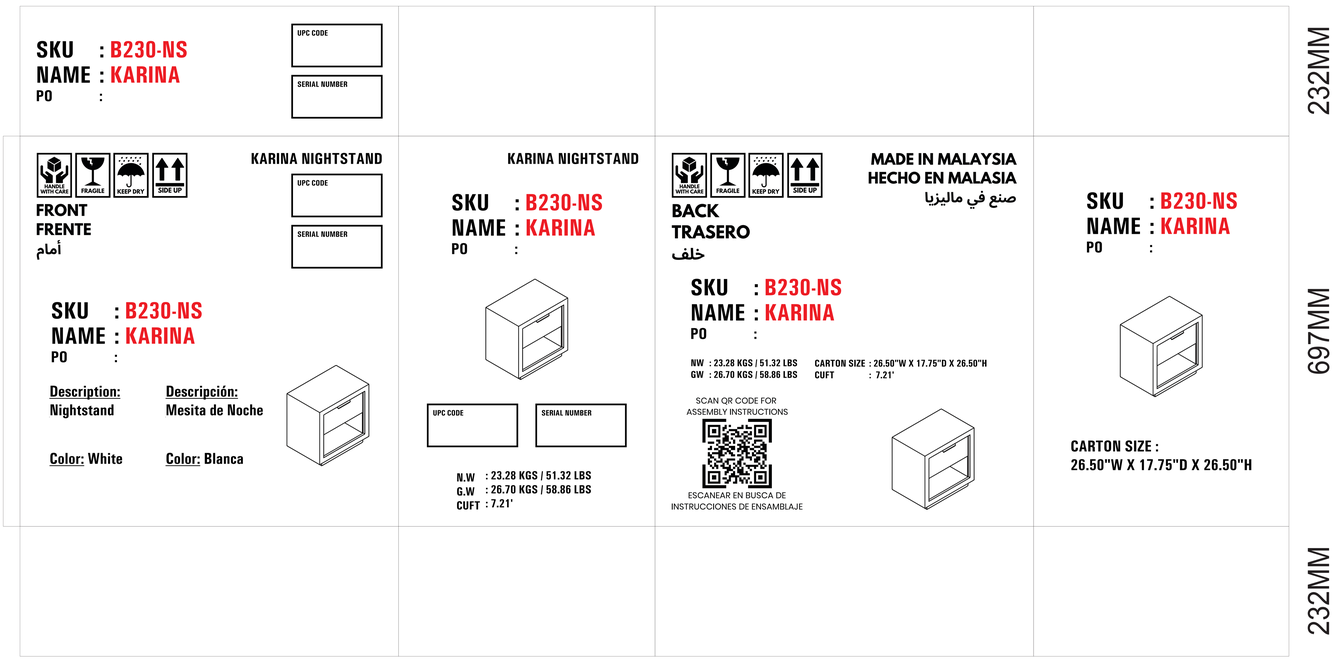

SCAN QR CODE FOR ASSEMBLY INSTRUCTIONS

ESCANEAR EN BUSCA DE INSTRUCCIONES DE ENSAMBLAJE

180mm

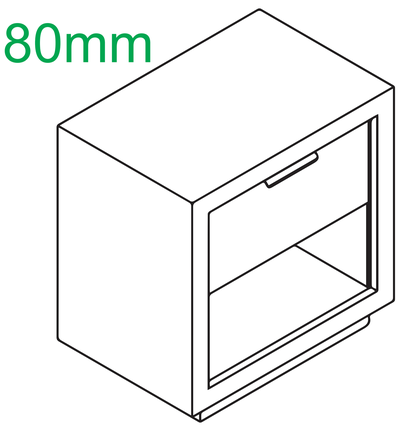

20mm

KARINA NIGHTSTAND

UPC CODE
160x75mm

SERIAL NUMBER
160x75mm

30mm

SKU : B230-NS
NAME : KARINA
PO :

20mm

20mm

Description:
Nightstand

Color: White

20mm

Descripción:
Mesita de Noche

Color: Blanca

HANDLE WITH CARE | FRAGILE | KEEP DRY | SIDE UP

FRONT
FRENTE
أمام

BACK
TRASERO
خلف

20mm

CARTON SIZE :
26.50"W X 17.75"D X 26.50"H

MADE IN MALAYSIA
HECHO EN MALASIA
صنع في ماليزيا

15mm

N.W : 23.28 KGS / 51.32 LBS
G.W : 26.70 KGS / 58.86 LBS
CUFT : 7.21'

12mm

NW : 23.28 KGS / 51.32 LBS
GW : 26.70 KGS / 58.86 LBS

12mm

CARTON SIZE : 26.50"W X 17.75"D X 26.50"H
CUFT : 7.21'